Service Data

SD-03-3415

Bendix® MV-3® Dash Control Module

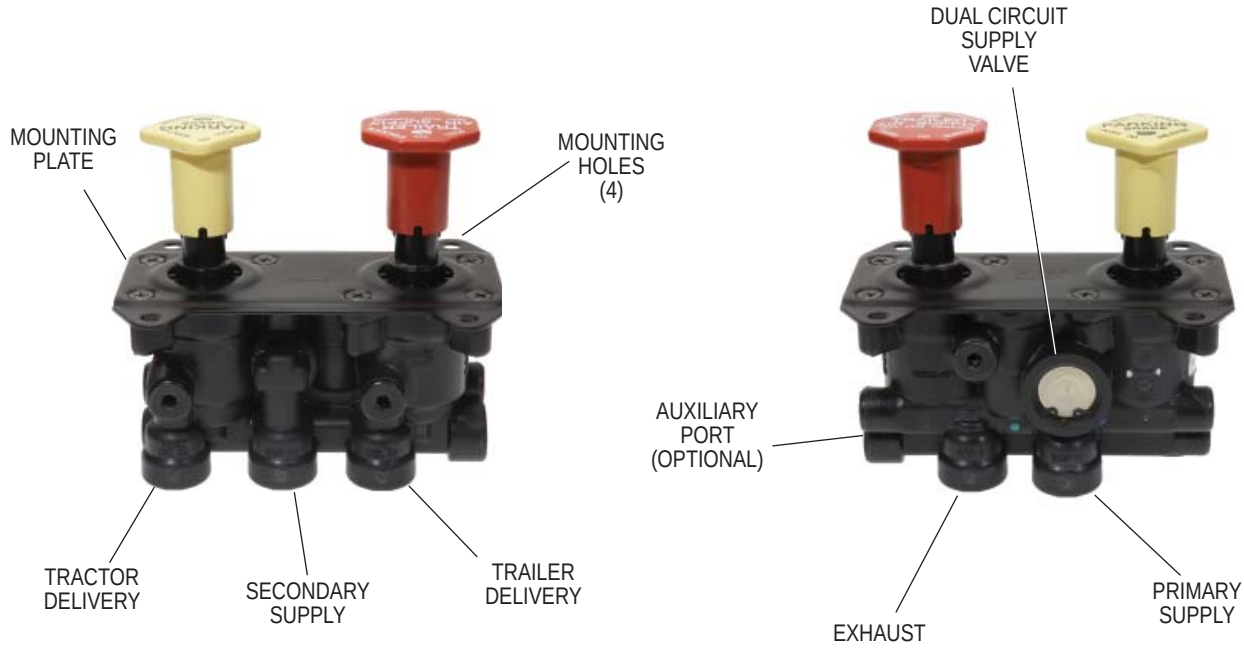

*FIGURE 1 - **MV-3® DASH CONTROL MODULE***

DESCRIPTION

The Bendix® MV-3® dash control module is a two-button, push-pull control valve housed in a single body which includes a dual circuit supply valve and a check valve. The MV-3® valve can duplicate the functions of any existing two or three valve push-pull system and has the advantages of reduced plumbing.

The MV-3® valve body, plungers and spools are made out of a non-metallic, non-corrosive material. All air connections are at the back of the valve with the exception of the optional auxiliary port as shown in Figure 1.

The MV-3® valve provides the following functions:

1 - Tractor Protection.

2 - Trailer Service Air Control.

3 - System Park.

4 - Trailer Park Only.

5 - Trailer Charge with Tractor Spring Brakes Applied (Tractor Park Only).

6 - Supply Reservoir Selection.

7 - Primary & Secondary Reservoir Connections.

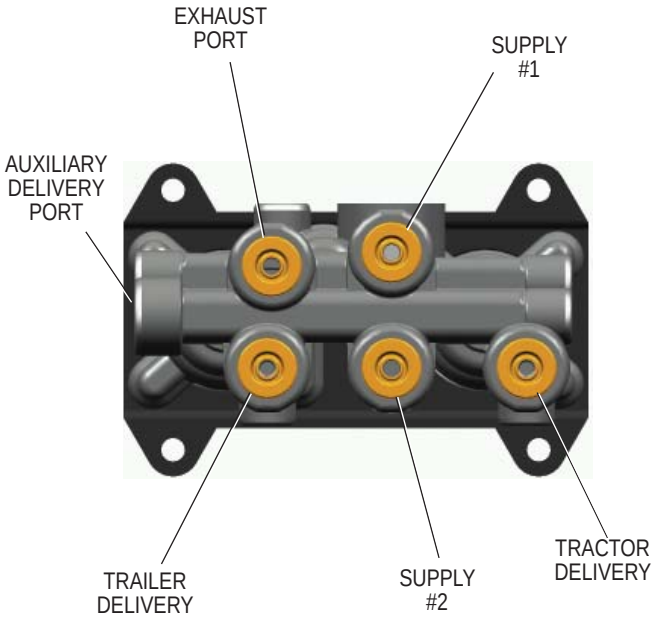

BOTTOM VIEW

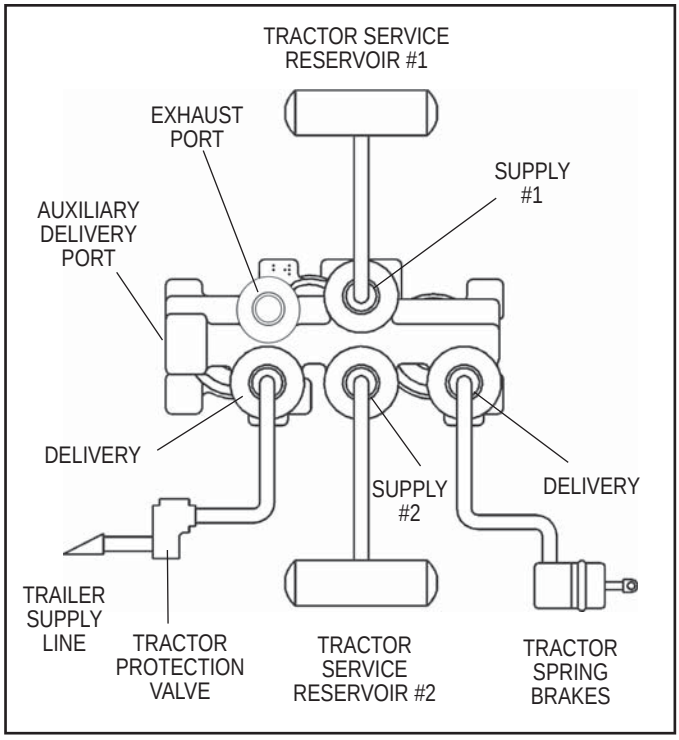

FIGURE 2 - ***MV-3® DASH CONTROL MODULE AIR CONNECTIONS***

OPERATION

During initial charge, with the system completely discharged, both buttons are out (Figure 3). When system pressure reaches 65 P.S.I., the red button (trailer supply) may be pushed in (Figure 4) and should stay in, charging the trailer system and releasing the trailer brakes. The yellow button may now be pushed in which will supply air to the tractor spring brakes, releasing them.

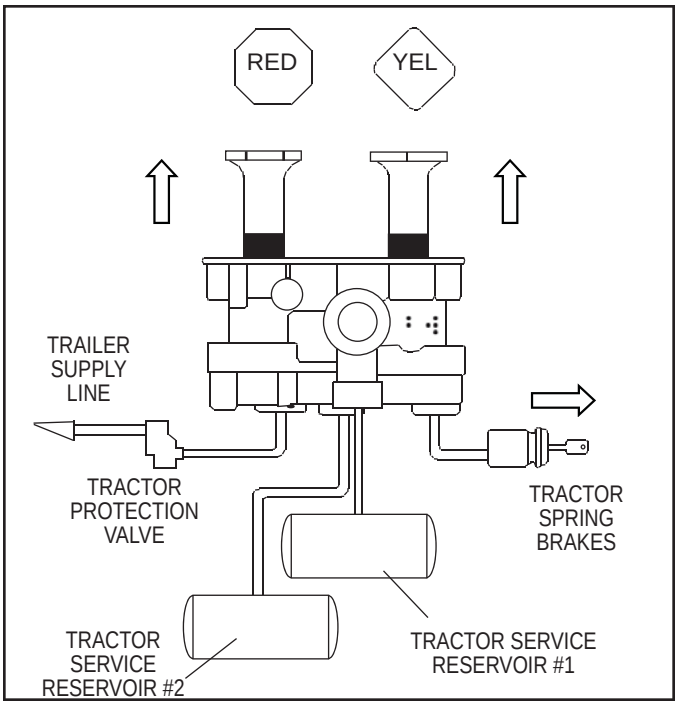

FIGURE 3 - ***INITIAL CHARGING OR SYSTEM PARK***

NORMAL OPERATING POSITION (FIGURE 5)

With both buttons pushed in, air is supplied to the trailer and to the tractor spring brakes; all brakes are released.

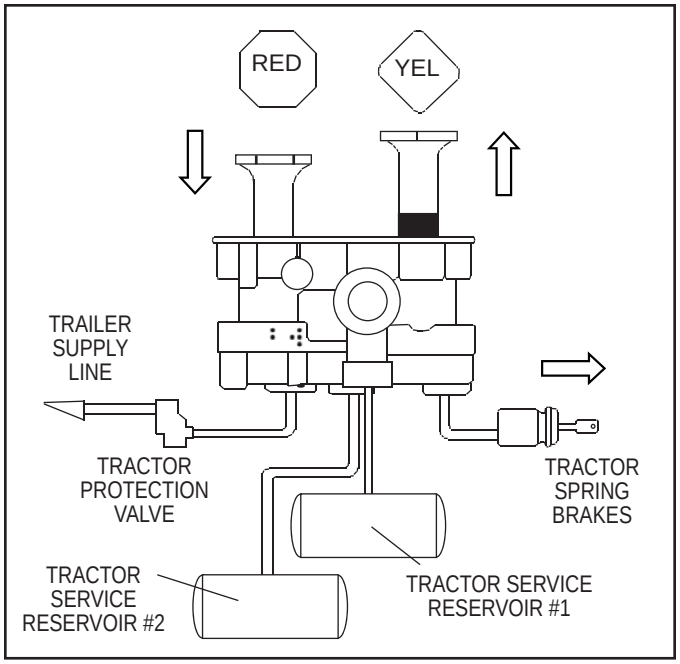

FIGURE 4 - ***TRAILER CHARGED & TRACTOR PARKED***

ACTUATION OF TRAILER PARKING OR EMERGENCY BRAKES (FIGURE 6)

To actuate the trailer brakes only, the red button is pulled out, exhausting the trailer supply line. The trailer brakes are now applied either by emergency air or spring brakes, depending on the type of trailer system.

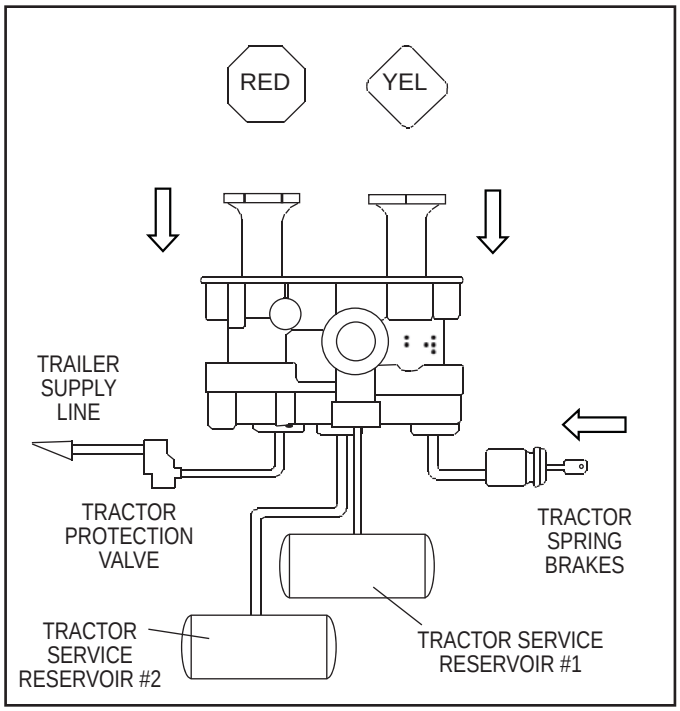

FIGURE 5 - ***NORMAL OPERATING POSITION TRACTOR & TRAILER***

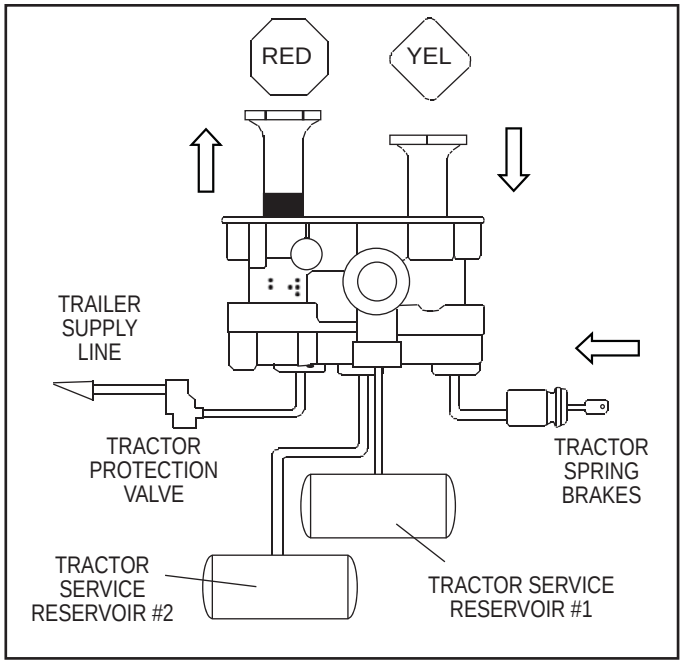

FIGURE 6 - ***TRAILER PARKED TRACTOR RELEASED***

SYSTEM PARK (FIGURE 3)

With both buttons in for normal run modes, the parking brakes on both tractor and trailer may be actuated by pulling the yellow (parking brake) button out, which exhausts the air from the tractor spring brakes and simultaneously causes the red (trailer supply) button to pop out, applying the trailer brakes. This complies with Federal Regulations that one control must apply all the parking brakes on the vehicle.

TRAILER CHARGE (FIGURE 4)

If both buttons are out when parking the combination vehicle and it is desired to recharge the trailer (leaving the tractor spring brakes applied), the red button may be pushed in, repressurizing the trailer supply line. This mode might also be used to park a combination vehicle with air actuated emergency brakes on the trailer to provide demonstrated parking capability with tractor spring brakes only.

AUTOMATIC APPLICATION

With both buttons in (the normal run configuration), if the supply pressure to the push-pull valves is reduced to approximately 20 to 45 P.S.I., the red button (trailer supply valve) must pop out, applying the emergency or parking brakes on the trailer. If the red button is held in manually and the pressure decreases to approximately 20 P.S.I., a tripper piston within the MV-3® valve will move upward, exhausting the trailer supply, effecting the required non-override feature.

OPERATIONAL TEST

1. With supply pressure at 120 P.S.I., push the red button in. The button must stay in.
2. Slowly reduce pressure in both service reservoirs. The red button must pop when supply pressure drops to 20 to 45 P.S.I.

   Note: The yellow button **must not** pop out before the red button.
3. Hold the red button in and continue to reduce pressure in all service reservoirs. Air must start to escape from the exhaust port when the trailer supply line pressure reaches 20 P.S.I. minimum.
4. Release the red button and rebuild the supply pressure to at least 120 P.S.I. Push in the yellow button; the yellow button must remain in.
5. Charge the system to 120 P.S.I. and push both buttons in. Pull the red button out. The yellow button must remain in.
6. Push the red button in and pull the yellow button out. The red button must pop out almost instantaneously.
7. Build both service reservoirs to 120 P.S.I. Decrease the pressure at the secondary reservoir. The primary reservoir pressure should not drop below 100 P.S.I. Repeat the test for decreasing primary reservoir pressure. The secondary reservoir pressure should not drop below 100 P.S.I.
8. If the MV-3® valve fails to operate as described, replace or repair it using genuine Bendix parts.
9. Close all reservoir drain cocks and deliberately caused leakage points before placing the vehicle in service.

GENERAL SAFETY GUIDELINES

WARNING! PLEASE READ AND FOLLOW THESE INSTRUCTIONS TO AVOID PERSONAL INJURY OR DEATH:

When working on or around a vehicle, the following general precautions should be observed at all times.

1. Park the vehicle on a level surface, apply the parking brakes, and always block the wheels. Always wear safety glasses.

2. Stop the engine and remove ignition key when working under or around the vehicle. When working in the engine compartment, the engine should be shut off and the ignition key should be removed. Where circumstances require that the engine be in operation, EXTREME CAUTION should be used to prevent personal injury resulting from contact with moving, rotating, leaking, heated or electrically charged components.

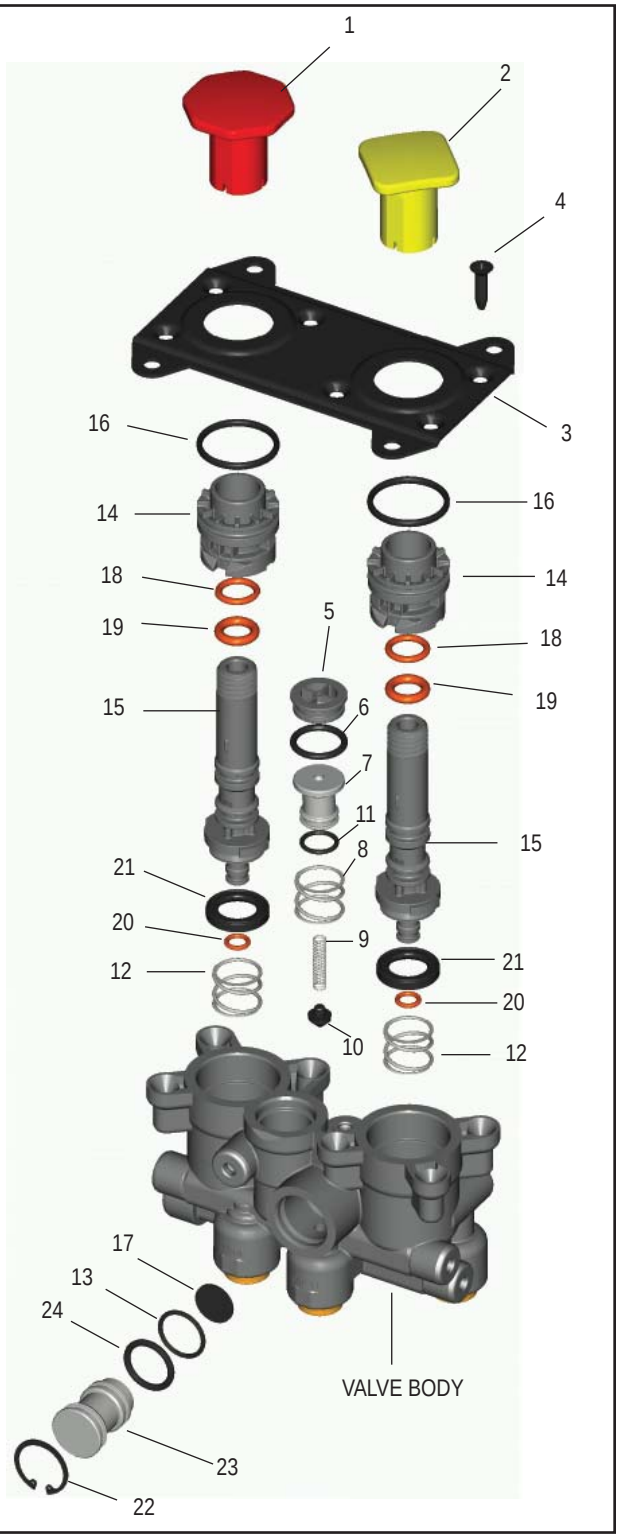

FIGURE 7 - ***MV-3® DASH CONTROL MODULE PARTS EXPLODED VIEW***

3. Do not attempt to install, remove, disassemble or assemble a component until you have read and thoroughly understand the recommended procedures. Use only the proper tools and observe all precautions pertaining to use of those tools.
4. If the work is being performed on the vehicle's air brake system, or any auxiliary pressurized air systems, make certain to drain the air pressure from all reservoirs before beginning ANY work on the vehicle. If the vehicle is equipped with an AD-IS® air dryer system or a dryer reservoir module, be sure to drain the purge reservoir.
5. Following the vehicle manufacturer's recommended procedures, deactivate the electrical system in a manner that safely removes all electrical power from the vehicle.
6. Never exceed manufacturer's recommended pressures.
7. Never connect or disconnect a hose or line containing pressure; it may whip. Never remove a component or plug unless you are certain all system pressure has been depleted.
8. Use only genuine Bendix® replacement parts, components and kits. Replacement hardware, tubing, hose, fittings, etc. must be of equivalent size, type and strength as original equipment and be designed specifically for such applications and systems.
9. Components with stripped threads or damaged parts should be replaced rather than repaired. Do not attempt repairs requiring machining or welding unless specifically stated and approved by the vehicle and component manufacturer.
10. Prior to returning the vehicle to service, make certain all components and systems are restored to their proper operating condition.
11. For vehicles with Antilock Traction Control (ATC), the ATC function must be disabled (ATC indicator lamp should be ON) prior to performing any vehicle maintenance where one or more wheels on a drive axle are lifted off the ground and moving.

CAUTION: Note the orientation of the buttons in relation to the valve to be sure they will be replaced properly.

DISASSEMBLY OF THE MV-3® VALVE

1. Remove the red (1) and yellow (2) buttons from the stems of the spools on the MV-3® valve by turning in a counterclockwise direction.
2. Remove and save the mounting hardware from the four corners of the cover plate (3).
3. If removing the valve from the vehicle, remove and identify the air lines from the back of the valve.

4. Remove the six Phillips head screws (4) from the cover plate (3) and carefully remove the cover plate (3) from the valve.
5. Remove the cap (5) and o-ring (6) from the bore of the tripper valve. Remove the piston (7), spring (8), spring (9) and check valve (10). These parts will all fall out of the cavity of the MV-3® valve by tilting the body forward. Remove the o-ring (11) from its groove on the piston (7).
6. Remove the two main spools from the body of the MV-3® valve by grasping the stem and pulling firmly. Remove the two springs (12) from the bottom of each spool cavity.
7. Pull the guide spool (14) over the threaded end of one of the plungers (15). Remove the o-ring (16) from the guide spool (14). Remove o-rings (18, 19 & 20) and the exhaust seal (21) from the plunger.
8. Repeat Step 7 on the remaining spool assembly.
9. Remove the retaining ring (22) from the cavity of the MV-3® valve body that contains the dual circuit supply valve.

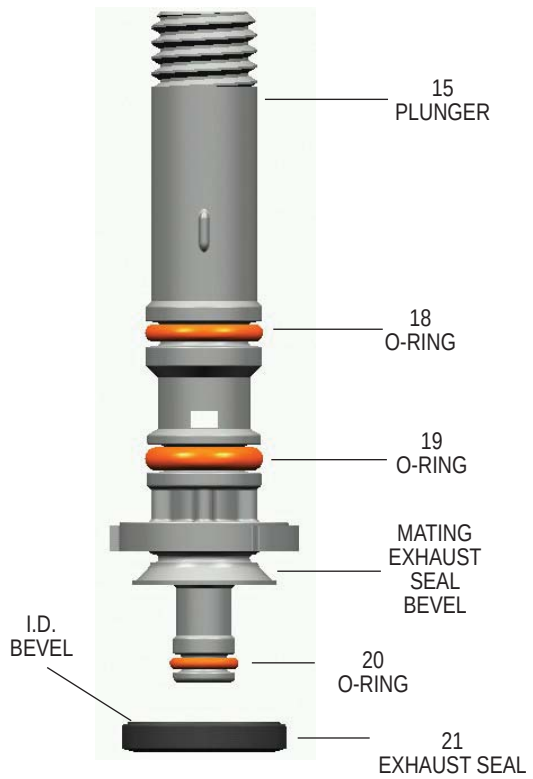

FIGURE 8 - ***PLUNGER AND EXHAUST SEAL***

10. Pull the check valve seat assembly (23) from the valve. Remove the two o-rings (24 and 13) from the check valve assembly. Remove the check valve (17) from the MV-3® valve body.

CLEANING & INSPECTION

The non-metallic components which comprise most of the parts of the MV-3® valve should not be immersed in any solvent type cleaner. Old lubricant should be wiped out with a clean dry cloth.

If any visible damage to the body or the spools can be detected, the complete unit must be replaced.

ASSEMBLY

DUAL CIRCUIT SUPPLY VALVE

1. Lubricate all o-rings and bores with silicone lubricant. Bendix Pc. No. 291126 or Dow Corning 55-M.
2. Place the check valve (17) into its seat in the body with its flat surface facing upward. If necessary, reach into the body to make sure the valve is seated evenly in the bore.
3. Install o-rings (24 & 13) onto the check valve (23). Then install the assembly into its cavity in the MV-3® valve body.
4. Install the snap ring (22) making sure it is fully seated in its groove.

SPOOLS

1. Install o-rings (18,19 & 20) and the exhaust seal (21) onto the stem of plungers (15).

   CAUTION: The exhaust seal (21) must be installed so that its beveled surface mates with the beveled surface of the plunger (Figure 8).
2. Install o-ring (16) onto the guide spool (14). Install the guide spool assembly over the threaded end of the plunger (15) and press down firmly until it contacts the plunger flange.
3. Install spring (12) over the boss in the bottom of the spool cavity in the body of the MV-3® valve. Place the spool assembly into the body, keeping the spool square to the body press and turn the stem until the spool is fully seated in its cavity. Note the assembly is keyed and may only be installed one way.
4. Repeat Steps 1, 2, and 3 with the remaining components for the opposite spool.

SHUTTLE AND CHECK VALVE

1. Install o-ring (11) into its groove on the piston (7) and o-ring (6) onto the cap (5).
2. Install spring (8) on the piston (7) and spring (9) on the boss of the check valve (10).
3. Install the spring and check valve into its cavity in the body of the MV-3® valve (tapered end of check valve to enter cavity first). Make sure the spring (9) is centered in the bore.
4. Install the piston assembly into the cavity making sure the spring (9) mates with the bore of the piston.
5. Install the cap (5) with o-ring (6).

FINAL ASSEMBLY

1. Install the cover plate (3) onto the valve body and retain with the six Phillips head screws. Torque to 30 in. lbs.
2. Attach the red (1) and yellow (2) buttons onto the threaded stems of the spools, making sure that they are oriented correctly as noted in Step 1 of *Disassembly* procedure.
3. Reattach the MV-3® valve to the dash using the hardware removed in Step 2 of *Disassembly*. If air lines were removed during disassembly, reconnect to ports marked during disassembly. When reconnecting threaded ports use a liquid thread sealing compound, attach the air line until it is hand tight and then turn approximately one and a half turns further (or using a maximum of 10 ft.-lbs. torque - Note: overtorquing will crack the port).

SERVICE TEST

Repeat the *Operational Test* procedures. Test drive vehicle at slow speed in a safe area prior to placing back into service.

For additional information refer to Technical Bulletin - Bendix Dash Valve Trip Pressure TCH-003-051.

BW1613 © 2008 Bendix Commercial Vehicle Systems LLC. All rights reserved. 5/2008 Printed in U.S.A.