Bendix

Service Data

SD-02-1302

Bendix Brake Chambers

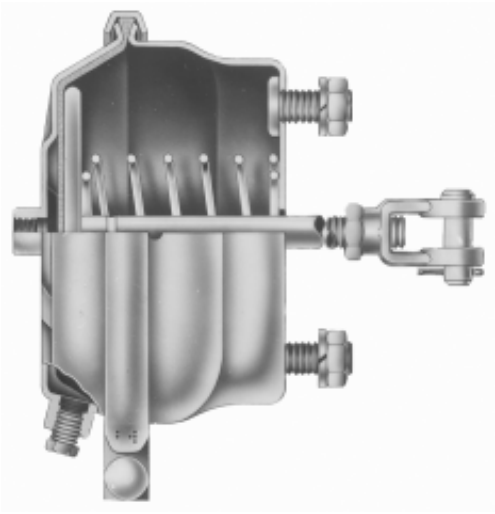

DESCRIPTION

The brake chamber is a diaphragm type actuator which converts the energy of air pressure into mechanical force. The diaphragm is held between the pressure plate and non-pressure plate by either a one piece clamp ring or a two piece clamp ring (Figs. 1 and 2).

Different size brake chambers are identified by numbers which specify the effective area of the diaphragm. A type 30 brake chamber has 30 square inches effective area.

Since one side of a brake chamber diaphragm is exposed to the applying air pressure and the other side to atmospheric pressure, the chamber has a pressure and a non-pressure side. The non-pressure plate is usually vented to atmosphere with four holes, however, on those installations where the chamber must be weather-proof, venting is accomplished through a drilled passage in the mounting bolts and the rod opening in the non-pressure plate is sealed by either a boot or an o-ring seal.

The standard diaphragm material is a compound of natural rubber with a fabric interior of nylon. Neoprene-nylon diaphragms are optionally available.

Smaller chambers such as type 3 and type 6 have one 1/4 in. NPT inlet port in the center of the pressure plate. Larger size chambers may have a center port and a side located port or either one. Current production Type 20 chambers and larger, generally have 3/8 in. NPT ports to facilitate compliance with FMVSS 121.

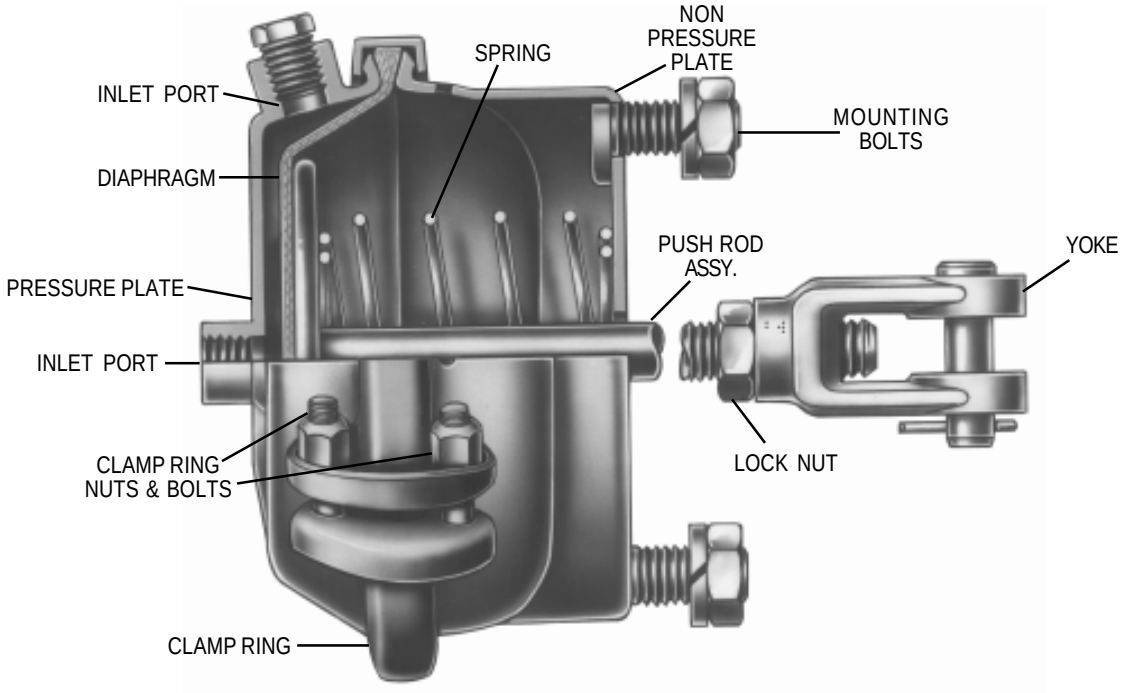

OPERATION

Controlled air pressure enters the brake chamber through the inlet port and acts upon the diaphragm moving the push plate and rod assembly forward.

When the brake chamber is used to actuate cam type brake foundation assemblies, the yoke (which is threaded on the push rod) is connected to a slack adjuster, which in turn is connected to the brake cam shaft. This forward motion of the push rod rotates the slack adjuster, cam shaft and cam applying the vehicle brakes.

The greater air pressure admitted to the brake chamber, the greater the force applied by the push rod and conversely, the less pressure applied to the brake chamber the less force applied by the push rod. Push rod force is determined by multiplying the delivered air pressure by the effective diaphragm area. For example, if 60 psi is admitted to a type 30 brake chamber, the lineal force on the end of the push rod is approximately 1800 lbs.

When air pressure is released from the brake chamber, the push rod return spring in combination with the brake shoe return spring returns the diaphragm, push plate and rod assembly, slack adjuster and brake cam to their released positions releasing the brakes.

PREVENTIVE MAINTENANCE

A. Every Month, 8,000 Miles or 300 Operating Hours, depending on type of operation

1. Check push rod travel and adjust travel at the slack adjuster if needed. Push rod travel should be as short as possible without brakes dragging. Excessive push rod travel reduces braking efficiency, shortens diaphragm life, gives slow braking response and wastes air.
2. Check push rod to slack adjuster alignment from release to full stroke position to be sure push rod moves out and returns properly without binding at the non-pressure plate hole or with other structures. Also check the angle formed by the slack adjuster arm and push rod. It should be greater than 900 when the chamber is in the released position and approach 900 at maximum re-adjustment stroke.
3. Check tightness of mounting nuts. Check cotter pins to make sure they are in place.
4. Check all hoses and lines. They should be secure and in good condition.

B. Every Year or after each 100,000 Miles or 3600 Operating Hours, depending on type of operation

1. Disassemble and clean all parts.

CLAMP RING TYPE BRAKE CHAMBER DATA (Dimensions in Inches)

Type	Effective Area (Sq. In.)	* Outside Diameter	Max. Stroke	Max. Stroke With Brakes Adjusted	Max. Stroke at Which Brakes Should Be Readjusted
6	6	4-1/2	1-5/8	Should	1-1/4
9	9	5-1/4	1-3/4	be as	1-3/8
12	12	5-11/16	1-3/4	short as	1-3/8
16	16	6-3/8	2-1/4	possible	1-3/4
20	20	6-25/32	2-1/4	without	1-3/4
24	24	7-7/32	2-1/4	brakes	1-3/4
30	30	8-3/32	2-1/2	dragging	2
36	36	*	*		2-1/4

*Dimensions listed do not include capscrew head projections for rotochambers and bolt projections for clamp type brake chambers.

FIGURE 3

2. Install new diaphragm or any other parts if they are worn or deteriorated. When the diaphragm, spring, or both are replaced, they should be replaced in the corresponding chamber on the same axle.

OPERATING AND LEAKAGE TESTS

A. OPERATING TEST

1. Apply brakes and observe the push rods move out promptly and without binding.
2. Release brakes and observe that the push rods return to the released position promptly and without binding.
3. Check push rod travel. Push rod travel should be as short as possible without brakes dragging. Adjust travel of push rod at slack adjuster if necessary.

B. LEAKAGE TEST

1. Make and hold a full brake application.
2. Using soap solution, coat clamping ring(s). If leakage is detected, tighten clamping ring only enough to stop leakage. DO NOT OVERTIGHTEN as this can distort sealing surface or clamping ring. Coat area around push rod hole (loosen boot if necessary). No leakage is permitted. If leakage is detected, the diaphragm must be replaced.

REMOVING AND INSTALLING

A. REMOVING

1. Block vehicle wheels.
2. Release air pressure in all reservoirs.
3. Disconnect line to chamber.
4. Remove the yoke pin.
5. Remove the brake chamber.

B. INSTALLING

1. Mount brake chamber to mounting bracket.
2. Install yoke (if removed) and yoke pin.
3. Check the angle formed by the centerline of the push rod and slack adjuster. This angle should be greater than 90° in the released position and approach 90° at maximum readjustment stroke.
4. Connect line to chamber. Check to be sure hoses are properly supported and clamped if necessary to provide proper clearance.

DISASSEMBLY

Clean exterior of brake chamber and mark parts in relation to position to each other so that it may be assembled in the same way.

NOTE: If brake chamber is to be dismantled without removing non-pressure plate from vehicle, slack adjuster should be backed-off.

CLAMP RING TYPE CHAMBER

1. Pull out (or push out with air pressure) push rod and clamp it at non-pressure plate. If using vise grip pliers, push rod should be protected so that it will not be damaged.
2. Remove clamp ring nuts and bolts.
3. If chamber has single clamp ring, spread the ring slightly, just enough to slip it off the plate. Care should be used so that clamp ring is not distorted. If chamber uses two piece clamp ring, remove clamp rings.
4. Remove pressure plate and diaphragm.
5. Remove yoke lock nut and yoke from push rod and release grip on push rod being careful to contain the push plate and non-pressure plate until the return spring load is relaxed.
6. Remove push rod assembly and spring.
7. Remove boot or o-ring (if applicable).

CLEANING AND INSPECTION

1. Clean all metal parts in cleaning solvent, removing all rust and scale. All diaphragm sealing surfaces should be smooth and clean.
2. Carefully inspect all metal parts for cracks, distortion or damage.
3. Replace all rubber parts and all other parts not considered serviceable with genuine Bendix replacement parts.

ASSEMBLY

CLAMP RING TYPE CHAMBER

1. Stand push rod assembly upright on a flat surface.
2. Position return spring on push rod.
3. Install boot or o-ring on non-pressure plate (if applicable).
4. Position non-pressure plate on push rod, and press plate down against tension of spring until plate bottoms on flat surface. Clamp rod with vise grips (protect rod) at the plate.
5. If installing single clamp ring, position ring over clamping surface of non-pressure plate.
6. Check alignment marks (made before disassembly) and position diaphragm in pressure plate and place on nonpressure plate.
7. If installing single clamp ring, work the clamp ring over the clamping surface of the pressure plate and draw the clamp lugs together with vise grips or a similar tool. Install bolt and nut in clamp and tighten, tapping with a soft faced mallet to center the clamp ring if necessary. Release grip on push rod and install remaining bolt and nut.
8. Install nuts and bolts evenly and only sufficiently to eliminate leakage.

TESTING OF A REBUILT BRAKE CHAMBER

Perform tests outlined in “Operating and Leakage Tests” section.

GENERAL SAFETY GUIDELINES

WARNING! PLEASE READ AND FOLLOW THESE INSTRUCTIONS TO AVOID PERSONAL INJURY OR DEATH:

When working on or around a vehicle, the following general precautions should be observed at all times.

1. **Park the vehicle on a level surface, apply the parking brakes, and always block the wheels. Always wear safety glasses.**
2. **Stop the engine and remove ignition key when working under or around the vehicle. When working in the engine compartment, the engine should be shut off and the ignition key should be removed. Where circumstances require that the engine be in operation, EXTREME CAUTION should be used to prevent personal injury resulting from contact with moving, rotating, leaking, heated or electrically charged components.**
3. **Do not attempt to install, remove, disassemble or assemble a component until you have read and thoroughly understand the recommended procedures. Use only the proper tools and observe all precautions pertaining to use of those tools.**

4. If the work is being performed on the vehicle's air brake system, or any auxiliary pressurized air systems, make certain to drain the air pressure from all reservoirs before beginning ANY work on the vehicle. If the vehicle is equipped with an AD-IS® air dryer system or a dryer reservoir module, be sure to drain the purge reservoir.

5. Following the vehicle manufacturer's recommended procedures, deactivate the electrical system in a manner that safely removes all electrical power from the vehicle.

6. Never exceed manufacturer's recommended pressures.

7. Never connect or disconnect a hose or line containing pressure; it may whip. Never remove a component or plug unless you are certain all system pressure has been depleted.

8. Use only genuine Bendix® replacement parts, components and kits. Replacement hardware, tubing, hose, fittings, etc. must be of equivalent size, type and strength as original equipment and be designed specifically for such applications and systems.

9. Components with stripped threads or damaged parts should be replaced rather than repaired. Do not attempt repairs requiring machining or welding unless specifically stated and approved by the vehicle and component manufacturer.

10. Prior to returning the vehicle to service, make certain all components and systems are restored to their proper operating condition.

11. For vehicles with Antilock Traction Control (ATC), the ATC function must be disabled (ATC indicator lamp should be ON) prior to performing any vehicle maintenance where one or more wheels on a drive axle are lifted off the ground and moving.

Bendix®

BW1426 © 2007 Bendix Commercial Vehicle Systems LLC. All rights reserved. 3/2007 Printed in U.S.A.